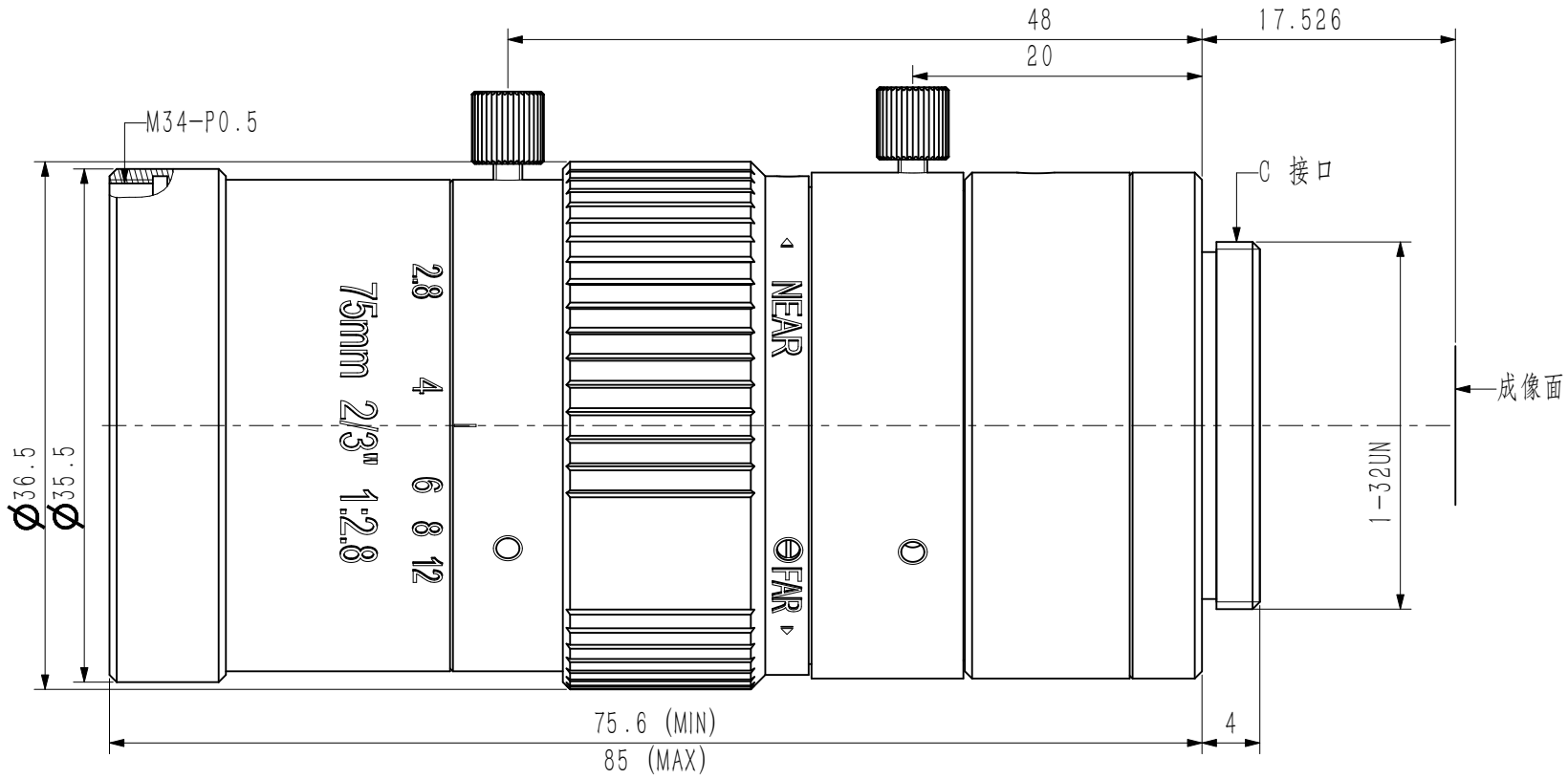
48
17.526
20
M34-P0.5
C 接口
成像面
NEAR
FAR
2.8 4 6 8 12
75mm 2/3" 1:2.8
Ø36.5
Ø35.5
1-32UN
75.6 (MIN)
85 (MAX)
4